Titan Port Location

Revised 10-6-2010

Port #	Location	Flange size/type	Distance to TCC	Inclination to midplane	Azimuth from beam axis
A1	Door A top	NW160	50.74"	16.3°	1.04°
A2	Door A Center	NW320	43.97"	0°	1.04°
A3	Door A Bottom	NW100	45.56"	-15.1°	1.04°
B1	Door B Top	NW160	50.74"	16.3°	36.04°
B2	Door B Center	NW320	43.97"	0°	36.04°
B3	Door B Bottom	NW100	45.56"	-15.1°	36.04°
C1	Door C Top	NW160	50.74"	16.3°	71.04°
C2	Door C Center	NW320	43.97"	0°	71.04°
C3	Door C Bottom	NW100	45.56"	-15.1°	71.04°
D1	Door D Top	NW160	50.74"	16.3°	106.04°
D2	Door D Center	NW320	43.97"	0°	106.04°
D3	Door D Bottom	NW100	45.56"	-15.1°	106.04°
E1	Door E Top	NW160	50.74"	16.3°	141.04°
E2	Door E Center	NW320	43.97"	0°	141.04°
E3	Door E Bottom	NW100	45.56"	-15.1°	141.04°
F1	Door F Top	NW160	50.74"	16.3°	176.04°
F2	Door F Center	NW320	43.97"	0°	176.04°
F3	Door F Bottom	NW100	45.56"	-15.1°	176.04°
G1	Door G Top	NW160	50.74"	16.3°	211.04°
G2	Door G Center	NW320	43.97"	0°	211.04°
G3	Door G Bottom	NW100	45.56"	-15.1°	211.04°
H1	Door H Top	NW160	50.74"	16.3°	286.04°
H2	Door H Center	NW320	43.97"	0°	286.04°
H3	Door H Bottom	NW100	45.56"	-15.1°	286.04°
TL1	Chamber Top	NW320	46.27"	40°	72.29°
TL2	Chamber Top	NW320	46.27"	40°	17.71°
TL3	Chamber Top	NW320	46.27"	40°	72.29°
TL4	Chamber Top	NW320	46.27"	40°	17.71°
TS1	Chamber Top	NW200	45.23"	40°	17.29°
TS2	Chamber Top	NW200	37.18"	60°	27.29°
TS3	Chamber Top	NW200	45.23"	40°	37.29°
TS4	Chamber Top	NW200	45.23"	40°	72.71°
TS5	Chamber Top	NW200	37.18"	60°	62.71°
TS6	Chamber Top	NW200	45.23"	40°	52.71°
TS7	Chamber Top	NW200	45.23"	40°	17.29°
TS8	Chamber Top	NW200	37.18"	60°	27.29°
TS9	Chamber Top	NW200	45.23"	40°	37.29°
TS10	Chamber Top	NW200	45.23"	40°	72.71°
TS11	Chamber Top	NW200	37.18"	60°	62.71°
TS12	Chamber Top	NW200	45.23"	40°	52.71°
TC	Chamber Top	NW320	35.31"	90°	0°

REVISIONS						
ZONE	REV	DESCRIPTION	DWN	CHK	APVD	DATE

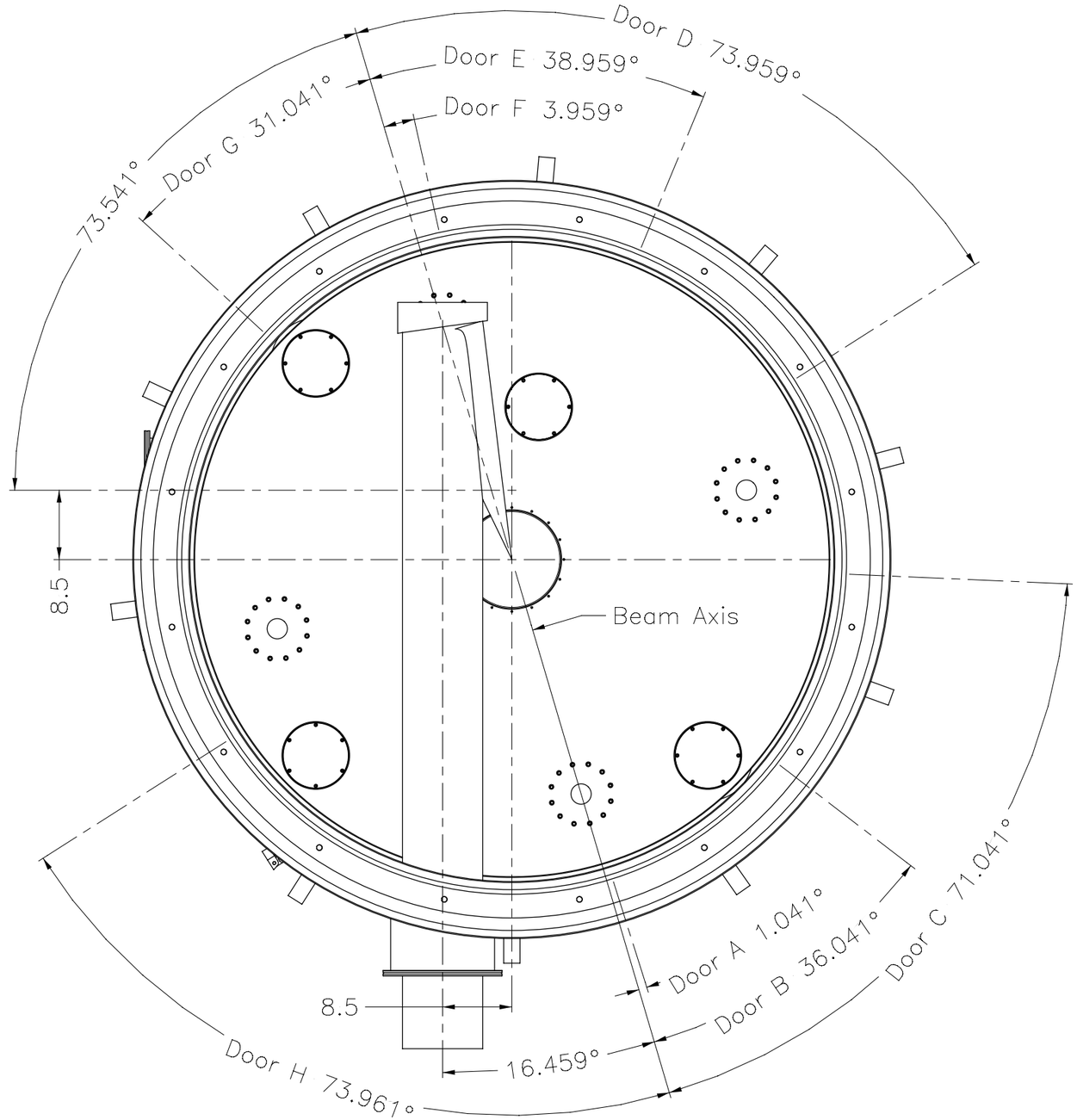

QTY REQD	PART OR IDENTIFYING NO	NOMENCLATURE OR DESCRIPTION/MATERIAL	MATERIAL SPECIFICATION	ITEM NO

PARTS LIST

Inches

THIRD ANGLE PROJECTION

UNLESS OTHERWISE SPECIFIED DIMENSIONS ARE IN INCHES
TOLERANCES ARE:
DECIMALS +/- ANGLES +/-
DO NOT SCALE THIS DRAWING

NEXT ASSY | USED ON
APPLICATIONS

Level 1 Drawing Unclassified

CONTRACT NO.

LAWRENCE LIVERMORE NATIONAL LABORATORY
UNIVERSITY OF CALIFORNIA / LIVERMORE , CALIFORNIA

APPROVALS	DATE
ORIGINATOR R Van Maren	5/17/03
DRAWN R Van Maren	5/17/03
CHECKED	
APPROVED	
ENGINEERING GROUP	DRAWING LEVEL

TITLE
Titan – Door locations
With respect to beam axis

SIZE	CAGE CODE	DWG NO	REV
D		Sketch	

SCALE | SHEET 1 OF 1

DRAWING NUMBER | REV | SH 1

MODEL:
DRAWING:
PRO/E

CLASSIFICATION:
UNCLASSIFIED

THIS DRAWING WAS CREATED BY THE UNIVERSITY OF CALIFORNIA WHICH OPERATES LAWRENCE LIVERMORE NATIONAL LABORATORY FOR THE U.S. DEPARTMENT OF ENERGY UNDER CONTRACT NO. W-7405-ENG-48("LLNL"). ANY REPRODUCTION AND/OR FABRICATION IS PROHIBITED WITHOUT THE PERMISSION OF LLNL.

REVISIONS						
ZONE	REV	DESCRIPTION	DWN	CHK	APVD	DATE

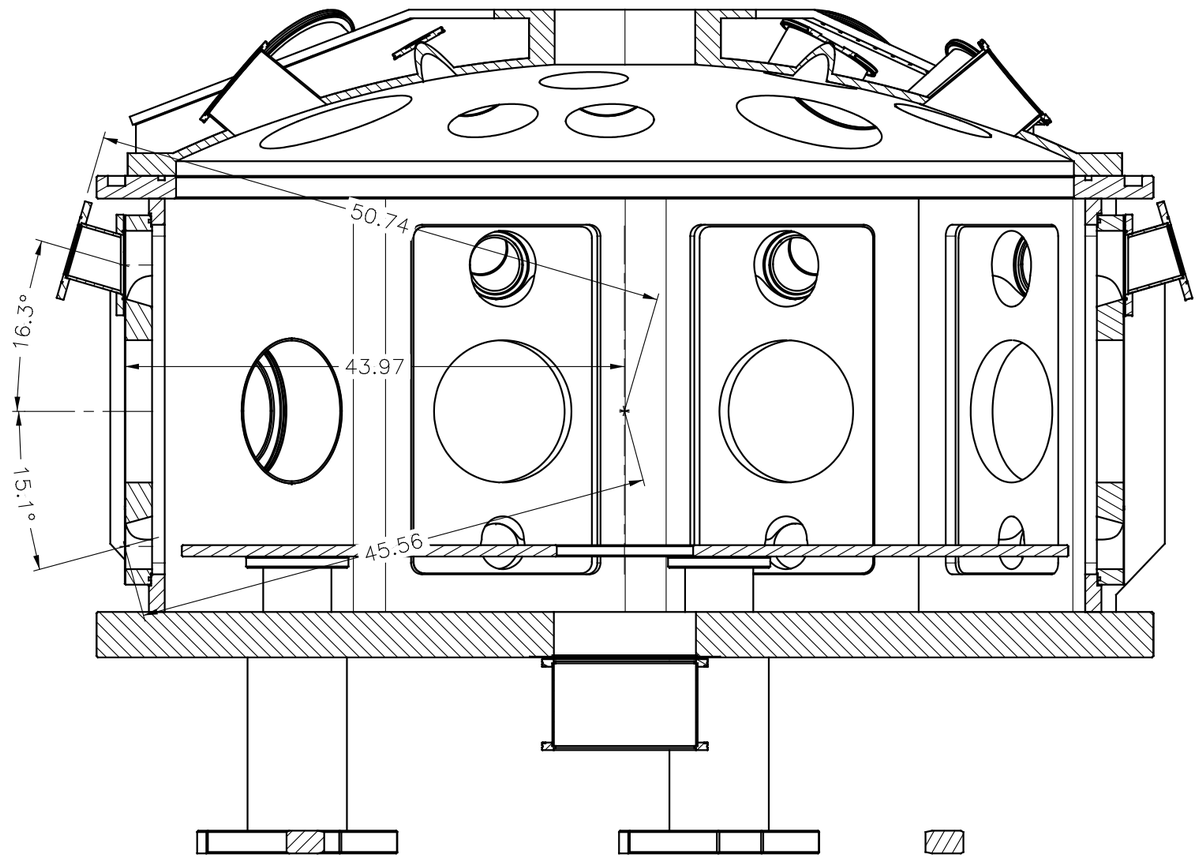

QTY REQD	PART OR IDENTIFYING NO	NOMENCLATURE OR DESCRIPTION/MATERIAL	MATERIAL SPECIFICATION	ITEM NO

PARTS LIST

Inches

THIRD ANGLE PROJECTION

UNLESS OTHERWISE SPECIFIED DIMENSIONS ARE IN INCHES TOLERANCES ARE: DECIMALS +/- ANGLES +/-
DO NOT SCALE THIS DRAWING

NEXT ASSY | USED ON

APPLICATIONS

Level 1 Drawing

Unclassified

CONTRACT NO.

LAWRENCE LIVERMORE NATIONAL LABORATORY
UNIVERSITY OF CALIFORNIA / LIVERMORE , CALIFORNIA

APPROVALS	DATE
ORIGINATOR R Van Maren	3/17/05
DRAWN R Van Maren	3/17/05
CHECKED	
APPROVED	
ENGINEERING GROUP	DRAWING LEVEL

TITLE
TITAN Laser
Port locations Door H

SIZE D | CAGE CODE | DWG NO Sketch | REV

SCALE | SHEET 1 OF 1

DRAWING NUMBER | REV | SH 1

MODEL:

DRAWING:

PROJ/E

CLASSIFICATION:
UNCLASSIFIED

THIS DRAWING WAS CREATED BY THE UNIVERSITY OF CALIFORNIA WHICH OPERATES LAWRENCE LIVERMORE NATIONAL LABORATORY FOR THE U.S. DEPARTMENT OF ENERGY UNDER CONTRACT NO. W-7405-ENG-48("LLNL"). ANY REPRODUCTION AND/OR FABRICATION IS PROHIBITED WITHOUT THE PERMISSION OF LLNL.

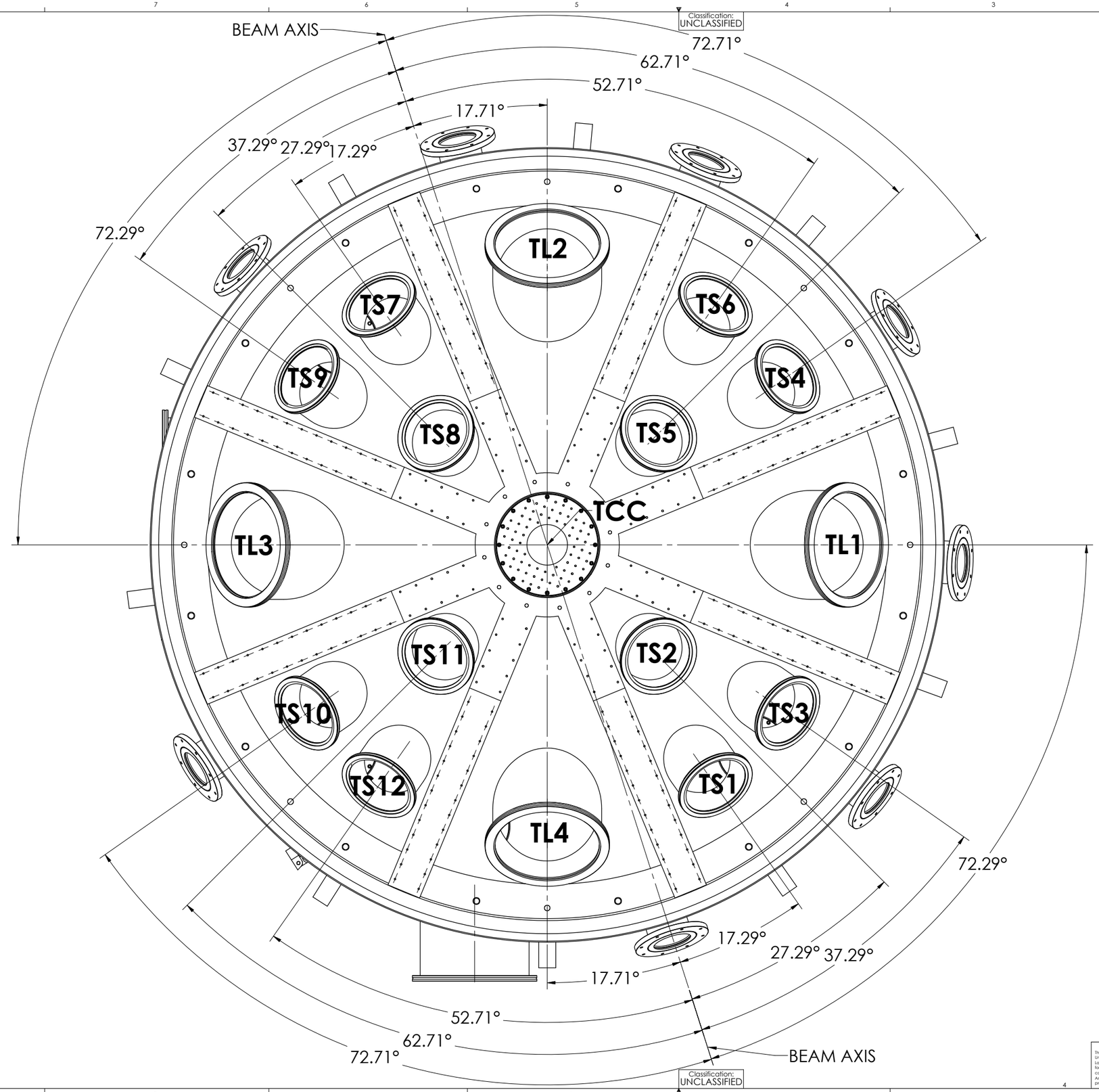

Classification: UNCLASSIFIED

Qty Req'd	Part #	Description / Material	Material Specification	Item #
		Parts list		

INCH

Third angle projection

Unless otherwise specified dimensions are in inches
tolerances are:
decimals ± angles ±

Do not scale this drawing

UNCLASSIFIED

	NAME	DATE
Originator	vanmaren1	12/14/05
Drawn	vanmaren1	12/14/05
Checked		
Approved		
Engineering group	NTED	

COMMENTS:

PROPRIETARY AND CONFIDENTIAL
This drawing was created by the University of California which operates Lawrence Livermore National Laboratory for the U.S. Department of Energy under contract No. W-7405-ENG-48 ("LLNL"). Any reproduction and/or fabrication is prohibited without the permission of LLNL.

Lawrence Livermore National Laboratory
University of California / Livermore, California

TITLE: Titan Target Chamber Top Port Designations

SIZE D | DWG. NO. Sketch | REV

SCALE: | SHEET 1 OF 1

Drawing number AA-A00-000000-AA | Rev 1 | SH 1

REVISIONS						
ZONE	REV	DESCRIPTION	DWN	CHK	APVD	DATE

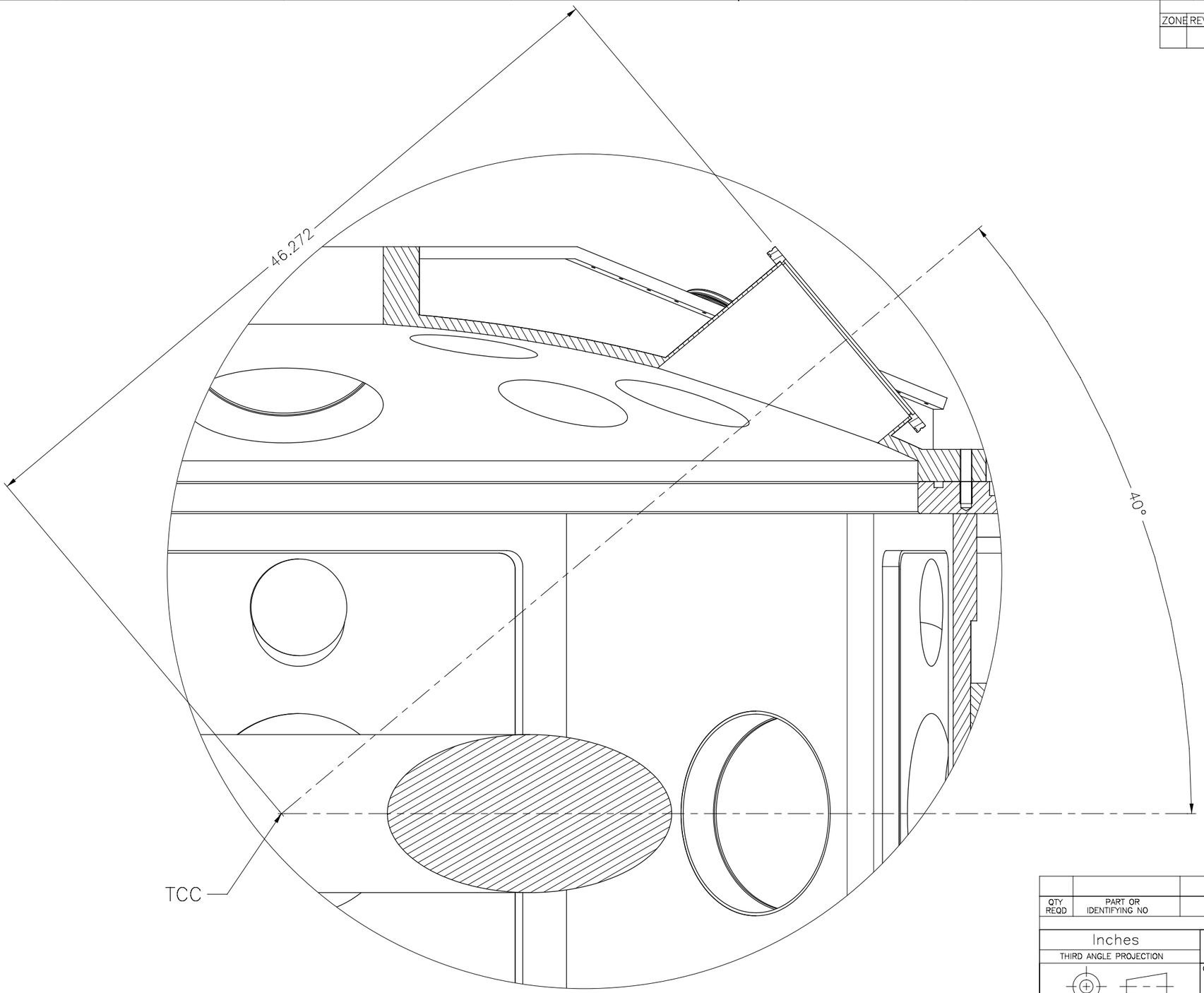

Section through port TL3

QTY REQD	PART OR IDENTIFYING NO	NOMENCLATURE OR DESCRIPTION/MATERIAL	MATERIAL SPECIFICATION	ITEM NO

PARTS LIST

Inches

THIRD ANGLE PROJECTION

Level 1 Drawing

Unclassified

UNLESS OTHERWISE SPECIFIED DIMENSIONS ARE IN INCHES
TOLERANCES ARE:
DECIMALS ±/– ANGLES ±/–
DO NOT SCALE THIS DRAWING

NEXT ASSY | USED ON
APPLICATIONS

CONTRACT NO.

LAWRENCE LIVERMORE NATIONAL LABORATORY
UNIVERSITY OF CALIFORNIA / LIVERMORE , CALIFORNIA

APPROVALS	DATE
ORIGINATOR R Van Maren	5/13/03
DRAWN R Van Maren	5/13/03
CHECKED	
APPROVED	
ENGINEERING GROUP	DRAWING LEVEL

TITLE **Titan** – Top large port location with respect to TCC
Ports – TL 1,2,3,4

SIZE	CAGE CODE	DWG NO	REV
D		Sketch	

SCALE | SHEET 1 OF 1

THIS DRAWING WAS CREATED BY THE UNIVERSITY OF CALIFORNIA WHICH OPERATES LAWRENCE LIVERMORE NATIONAL LABORATORY FOR THE U.S. DEPARTMENT OF ENERGY UNDER CONTRACT NO. W-7405-ENG-48("LLNL"). ANY REPRODUCTION AND/OR FABRICATION IS PROHIBITED WITHOUT THE PERMISSION OF LLNL.

CLASSIFICATION:
UNCLASSIFIED

PRO/E | DRAWING: | MODEL:

DRAWING NUMBER | REV | SH 1

REVISIONS						
ZONE	REV	DESCRIPTION	DWN	CHK	APVD	DATE

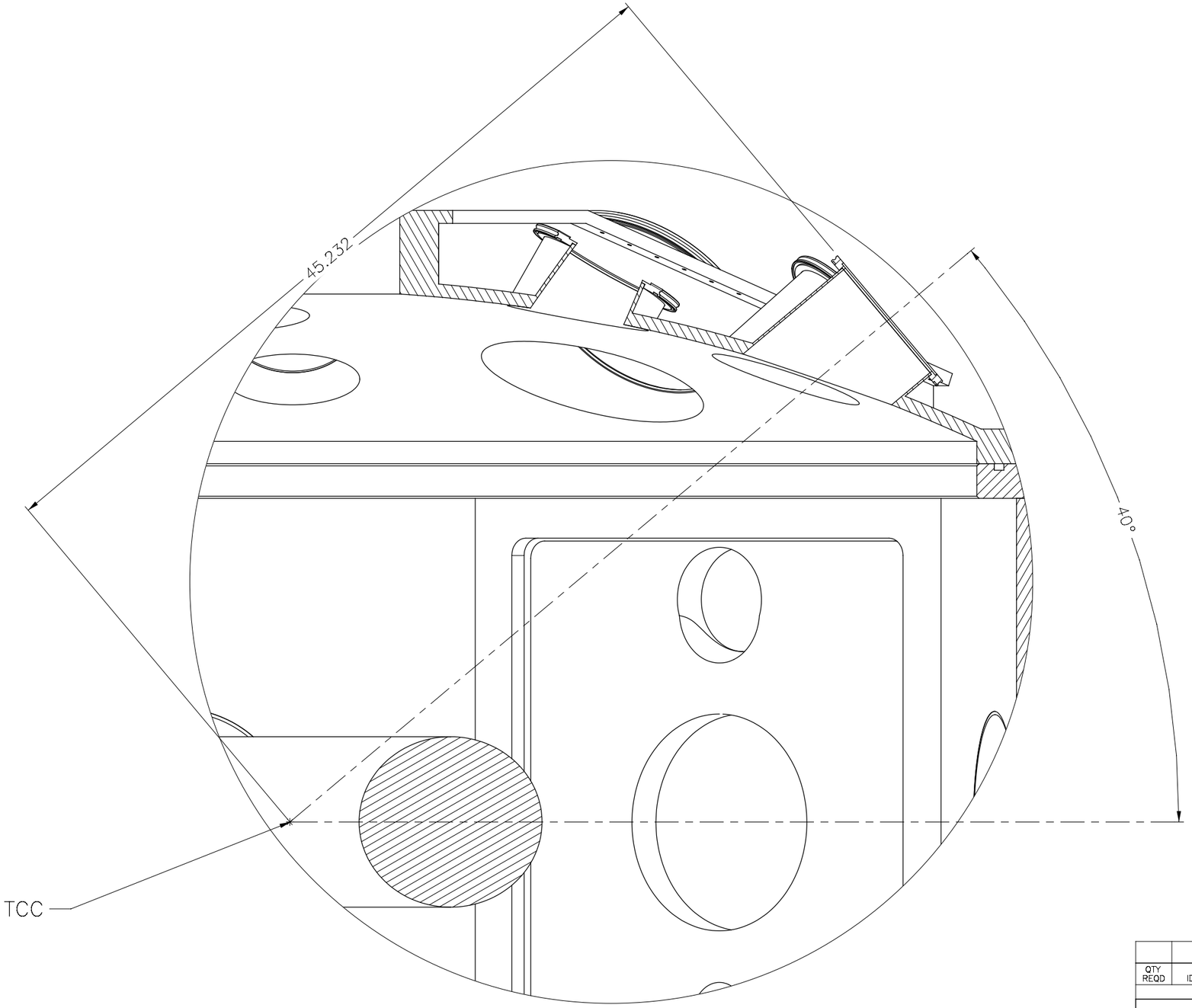

Section through port TS7

QTY REQD	PART OR IDENTIFYING NO	NOMENCLATURE OR DESCRIPTION/MATERIAL	MATERIAL SPECIFICATION	ITEM NO

PARTS LIST

Inches

THIRD ANGLE PROJECTION

Level 1 Drawing

Unclassified

UNLESS OTHERWISE SPECIFIED
DIMENSIONS ARE IN INCHES
TOLERANCES ARE:
DECIMALS +/- ANGLES +/-
DO NOT SCALE THIS DRAWING

NEXT ASSY | USED ON
APPLICATIONS

CONTRACT NO.

APPROVALS	DATE
ORIGINATOR R Van Maren	5/13/03
DRAWN R Van Maren	5/13/03
CHECKED	
APPROVED	
ENGINEERING GROUP	DRAWING LEVEL

LAWRENCE LIVERMORE NATIONAL LABORATORY
UNIVERSITY OF CALIFORNIA / LIVERMORE , CALIFORNIA

TITLE **Titan** – Top **small** port location with respect to TCC
Ports TS – 1,3,4,6,7,9,10,12

SIZE	CAGE CODE	DWG NO	REV
D		Sketch	

SCALE | SHEET 1 OF 1

CLASSIFICATION:
UNCLASSIFIED

THIS DRAWING WAS CREATED BY THE UNIVERSITY OF CALIFORNIA WHICH OPERATES LAWRENCE LIVERMORE NATIONAL LABORATORY FOR THE U.S. DEPARTMENT OF ENERGY UNDER CONTRACT NO. W-7405-ENG-48("LLNL"). ANY REPRODUCTION AND/OR FABRICATION IS PROHIBITED WITHOUT THE PERMISSION OF LLNL.

DRAWING NUMBER | REV | SH 1

MODEL:
DRAWING:
PRO/E

REVISIONS						
ZONE	REV	DESCRIPTION	DWN	CHK	APVD	DATE

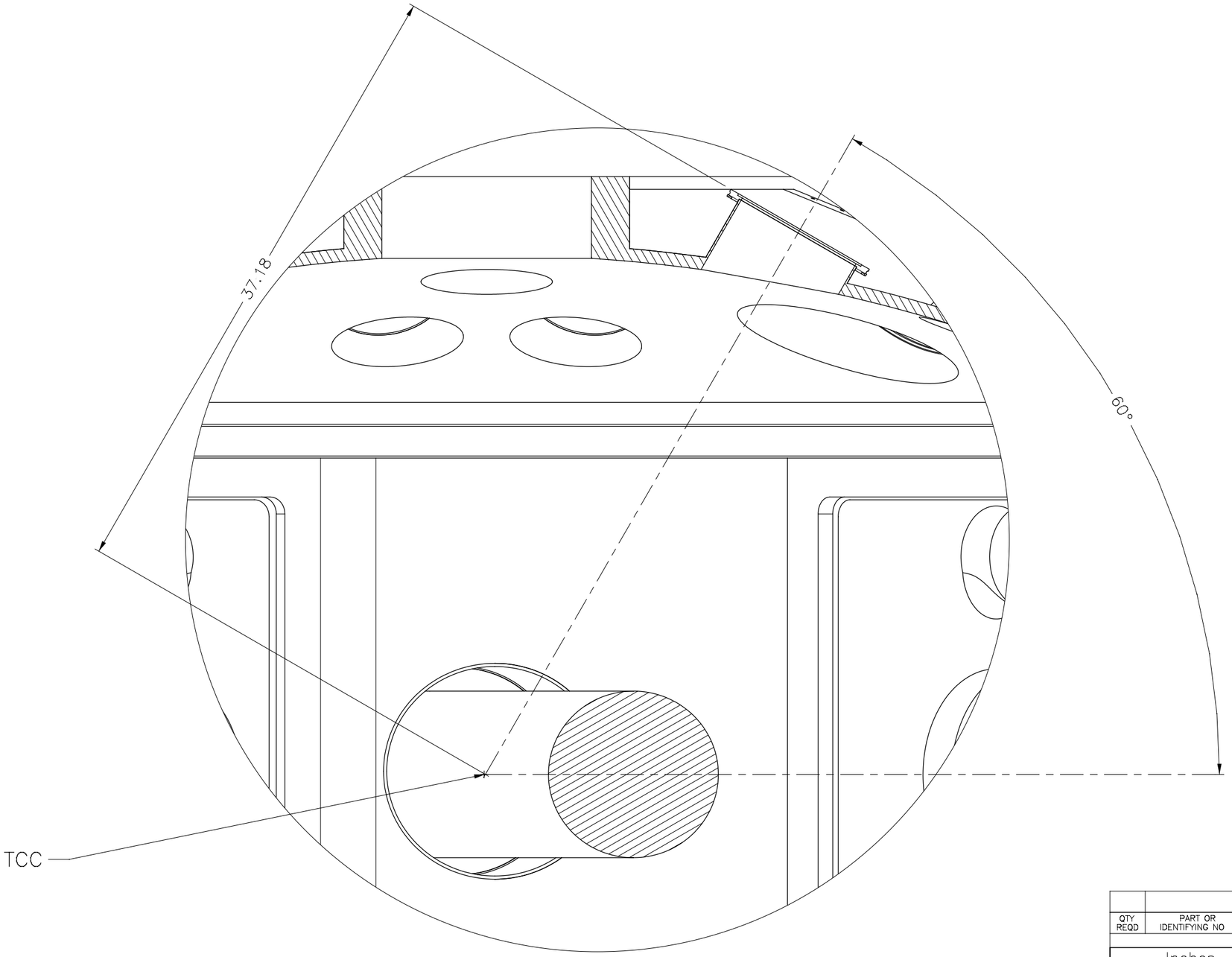

Section through port TS7

QTY REQD	PART OR IDENTIFYING NO	NOMENCLATURE OR DESCRIPTION/MATERIAL	MATERIAL SPECIFICATION	ITEM NO

PARTS LIST

Inches

THIRD ANGLE PROJECTION

UNLESS OTHERWISE SPECIFIED DIMENSIONS ARE IN INCHES TOLERANCES ARE: DECIMALS +/- ANGLES +/-
DO NOT SCALE THIS DRAWING

NEXT ASSY	USED ON

APPLICATIONS

Level 1 Drawing

Unclassified

CONTRACT NO.

APPROVALS	DATE
ORIGINATOR R Van Maren	5/13/03
DRAWN R Van Maren	5/13/03
CHECKED	
APPROVED	
ENGINEERING GROUP	DRAWING LEVEL

LAWRENCE LIVERMORE NATIONAL LABORATORY
UNIVERSITY OF CALIFORNIA / LIVERMORE , CALIFORNIA

TITLE Titan – Top small port location with respect to TCC
Ports TS2,TS5,TS8,TS11

SIZE D | CAGE CODE | DWG NO Sketch | REV

SCALE | SHEET 1 OF 1

DRAWING NUMBER | REV | SH 1

MODEL:

DRAWING:

PRO/E

CLASSIFICATION:
UNCLASSIFIED

THIS DRAWING WAS CREATED BY THE UNIVERSITY OF CALIFORNIA WHICH OPERATES LAWRENCE LIVERMORE NATIONAL LABORATORY FOR THE U.S. DEPARTMENT OF ENERGY UNDER CONTRACT NO. W-7405-ENG-48("LLNL"). ANY REPRODUCTION AND/OR FABRICATION IS PROHIBITED WITHOUT THE PERMISSION OF LLNL.