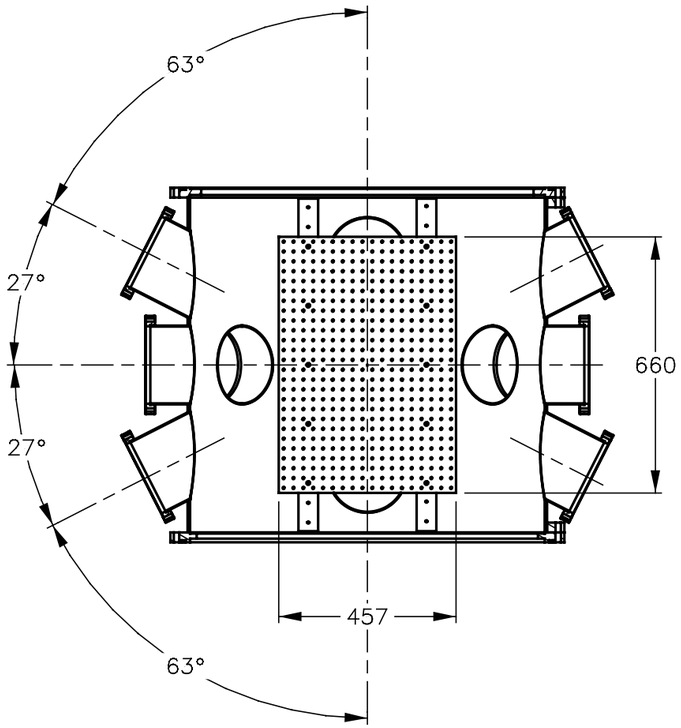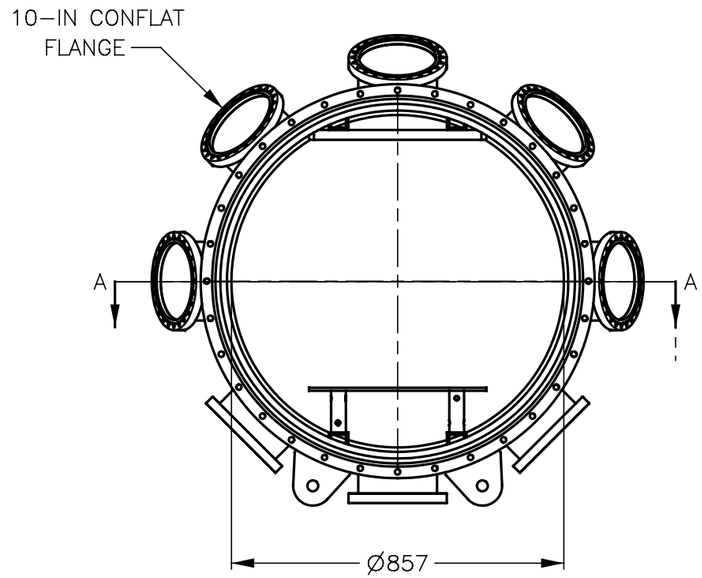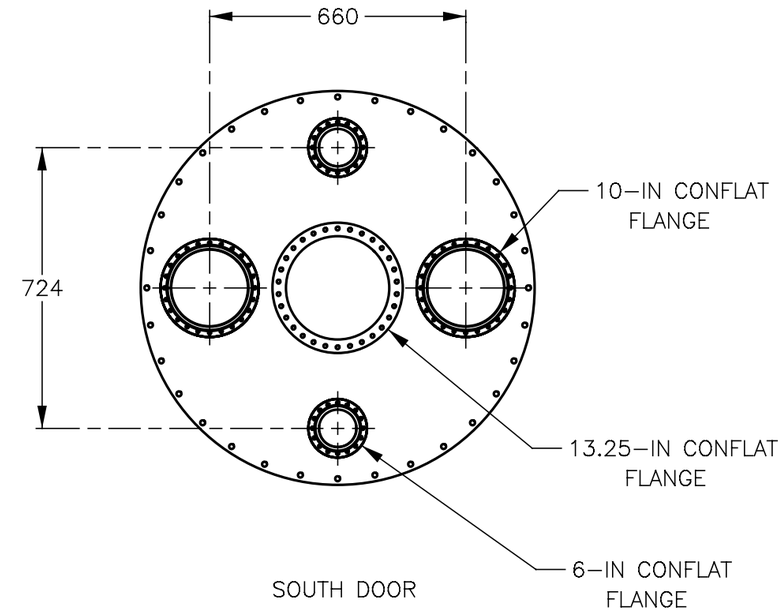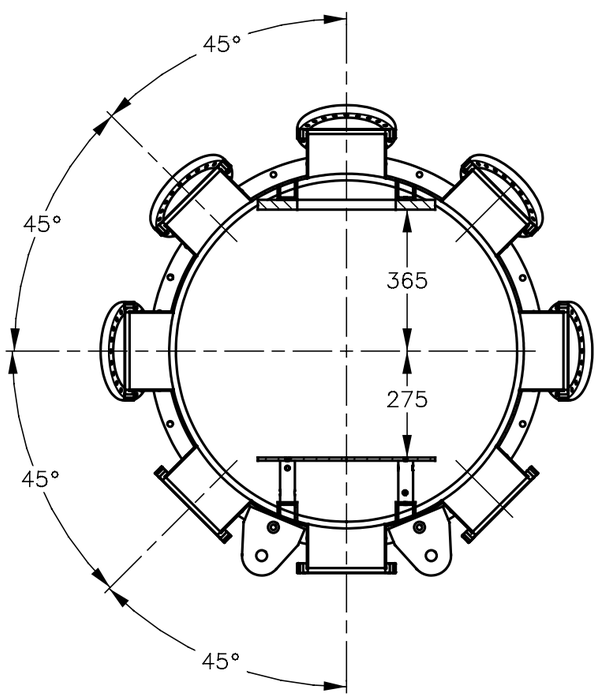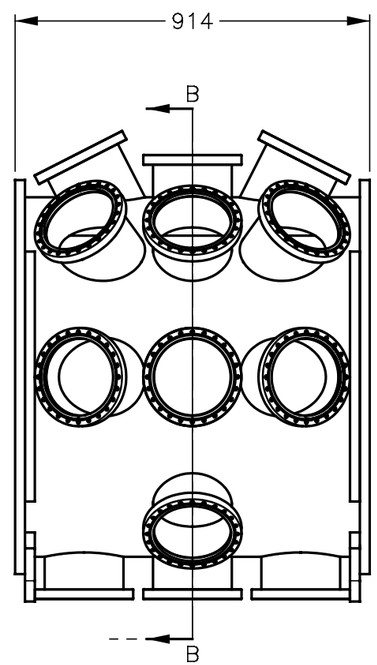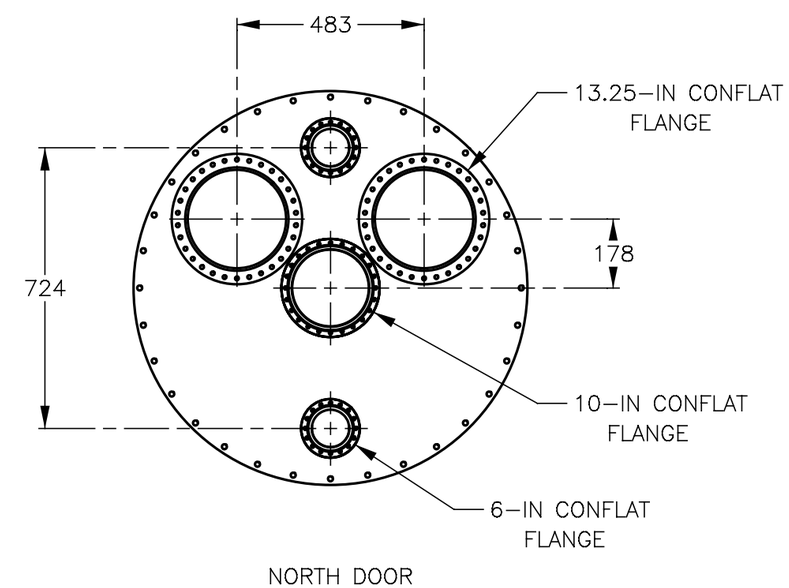JANUS LASER
TARGET CHAMBER #1